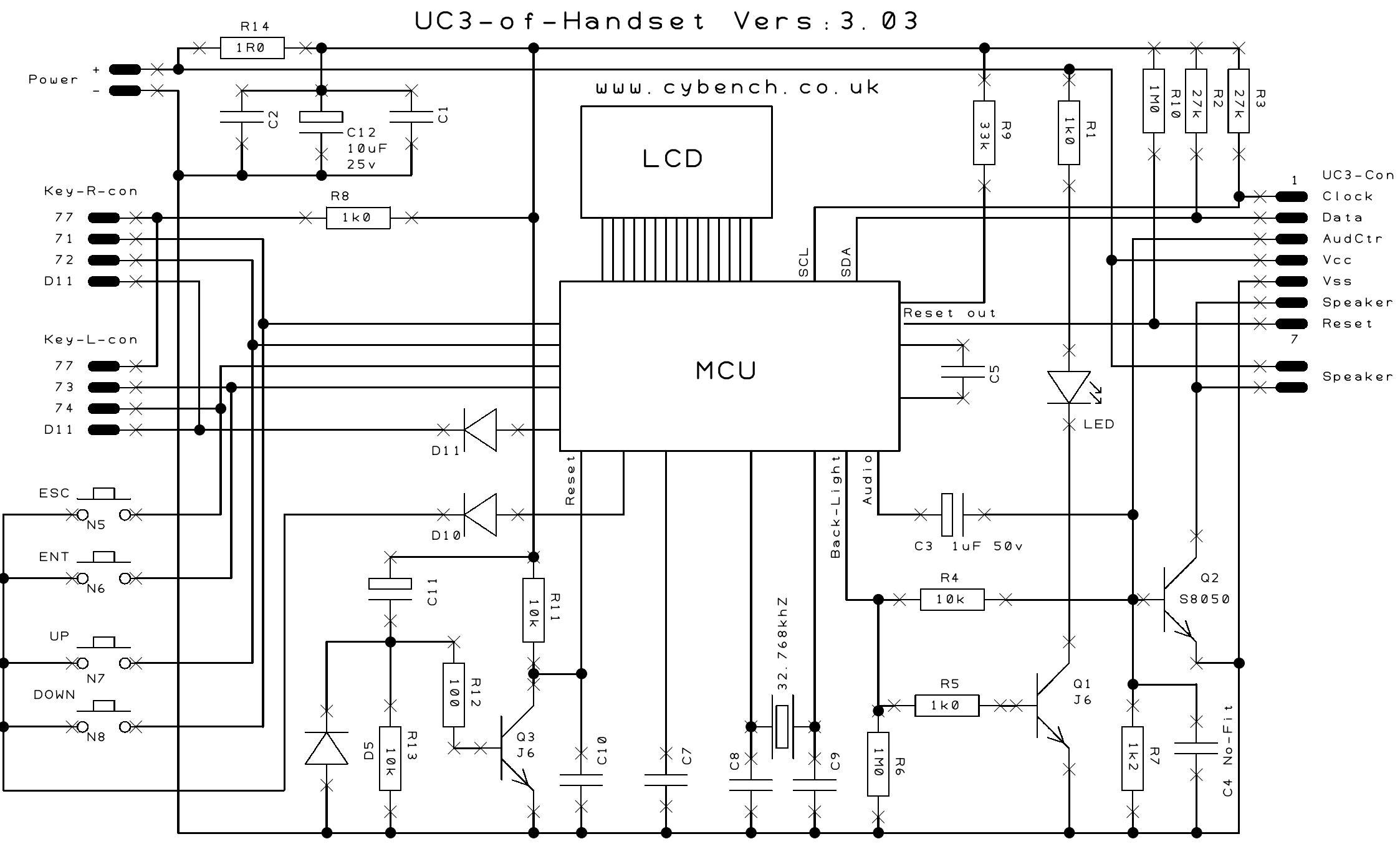
UC3-of-Handset Vers:3.03
www.cybench.co.uk
Power
+
-
R14
1R0
C2
C12
10uF
25v
C1
LCD
MCU
Key-R-con
77
71
72
D11
Key-L-con
77
73
74
D11
R8
1k0
D11
D10
ESC
N5
ENT
N6
UP
N7
DOWN
N8
Reset
C11
R11
10k
R12
100
Q3
J6
D5
R13
10k
C10
C7
C8
32.768khZ
C9
Back-Light
Audio
SCL
SDA
Reset out
C5
R9
33k
R1
1k0
LED
C3 1uF 50v
R4
10k
R5
1k0
R6
1M0
Q1
J6
Q2
S8050
R7
1k2
C4 No-Fit
1M0
R10
27k
R2
27k
R3
UC3-Con
1
Clock
Data
AudCtr
Vcc
Vss
Speaker
Reset
7
Speaker